Interactive Attention Transfer Network for Cross-domain Sentiment Classification

Kai Zhang[1], Hefu Zhang[1], Qi Liu[1,2,*], Hongke Zhao[1], Hengshu Zhu[3], Enhong Chen[1,2]
[1]Anhui Province Key Laboratory of Big Data Analysis and Application, University of Science of Technology of China
[2]School of Data Science, University of Science and Technology of China
[3]Baidu Talent Intelligence Center, Baidu Inc

Scan to view details!

Introduction

Motivation

- Sentiment analysis heavily relies on **large-scale corpora** for model training and usually perform well on **label-rich data**.
- The **Cross-domain sentiment analysis** can reduce the reliance on the massive amounts of labeled data.
- However, most of the previous efforts mainly concentrate on extracting **common features** and ignore the characteristics which do not express the sentiment directly, such as the individual modeling of the aspect.
- Thus, fully considers the effects of **the aspect** (e.g., the battery life in reviewing an electronic product) information in the sentences is necessary. In order to better solve this problem, we propose an Interactive Attention Transfer Network **(IATN)** for cross-domain sentiment classification.

Challenges

- What is the **key information** in the sentence that we deserve?
- How do we make the most of this critical information? How do we model them together with sentences?
- How to verify that the information we extracted is indeed valid for the task.

The appearance of the PC looks good, but the battery life is too short.

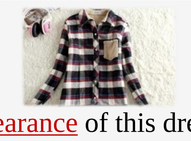

The appearance of this dress looks nice, and the fabric is not bad.

Speaker: Kai Zhang
Email: sa517494@mail.ustc.edu.cn
Lab Homepage: http://bigdata.ustc.edu.cn

Framework

Flowchart

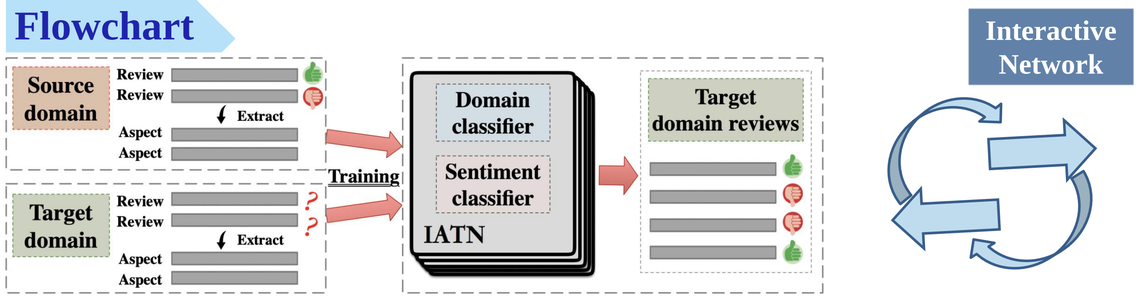

Problem Definition: Given two domains, D_s is the source domain and D_t is the target domain. Denote that each item (**e.g., review**) at both domains consists of n words marked as $s = \{w_s^1, w_s^2, \dots, w_s^n\}$ and their aspect sequence contains m words marked as $a = \{w_a^1, w_a^2, \dots, w_a^m\}$. **The goal:** To train a robust model based on labeled data in source domain and adapt it to predict the unlabeled data in target domain.

IATN Model

- IATN models **sentences** and **aspects** independently and conducts an interactive attention learning to them.

S-net

- Learn **shared information** between different domains.
- Pooling the sentence feature representation vectors to A-net.

A-net

- Mining and modeling the aspect information.
- Use aspect information as the **auxiliary task** of domain classification.

S-net and **A-net** have similar structures.

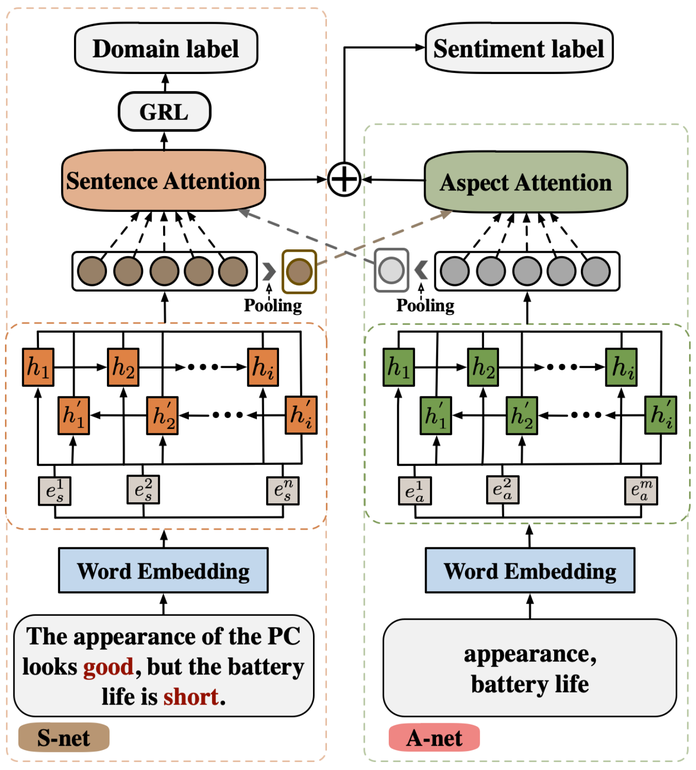

$$e_s = \{e_s^1, e_s^2, e_s^3 \dots e_s^n\}. \; e_a = \{e_a^1, e_a^2, e_a^3 \dots e_a^m\}.$$

$$\begin{aligned} i_t &= \delta(W_{ei} e_s^t + W_{hi} h_{t-1} + \widehat{b}_i), \\ f_t &= \delta(W_{ef} e_s^t + W_{hf} h_{t-1} + \widehat{b}_f), \\ c_t &= f_t \cdot c_{t-1} + i_t \cdot \tau(W_{ec} e_s^t + W_{hc} h_{t-1} + \widehat{b}_c), \\ o_t &= \delta(W_{eo} e_s^t + W_{ho} h_{t-1} + \widehat{b}_o), \\ h_t &= o_t \cdot tanh(c_t), \end{aligned}$$

$$h_s^p = \sum_{i=1}^{n} h_s^i / n, \quad h_a^p = \sum_{i=1}^{m} h_a^i / m.$$

$$\alpha_i = \frac{exp(\gamma(h_s^i))}{\sum_{j=1}^{n+1} exp(\gamma(h_s^i))}, \beta_i = \frac{exp(\gamma(h_a^i, h_s^p))}{\sum_{j=1}^{m} exp(\gamma(h_a^i, h_s^p))},$$

$$S_r = \sum_{i=1}^{n+1} \alpha_i h_s^i. \qquad A_r = \sum_{i=1}^{m} \beta_i h_a^i.$$

$$y_d' = softmax(W_d \widetilde{S}_r + \widehat{b}_d).$$

$$y_s' = softmax(W_s \cdot [S_r \oplus A_r] + \widehat{b}_s).$$

Experiments

Datasets

- We choose the reviews data from four domains: Book (B), DVD (D), Electronics (E) and Kitchen appliances (K). Each of the domains contains 6,000 labeled data, in which there are 3,000 positive reviews and 3,000 negative reviews.
- For each sentence, we extract their aspect sequence and conduct the cross-domain experiments between every two domains, which means we have 12 classification tasks.

Main Results

Table 1: Sentiment classification accuracy on Amazon dataset.

Benchmarks	(a) Book → Tasks			(b) DVD → Tasks			(c) Electronics → Tasks			(d) Kitchen → Tasks			Avg
	B→D	B→E	B→K	D→B	D→E	D→K	E→B	E→D	E→K	K→B	K→D	K→E	
Naive	0.786	0.752	0.737	0.756	0.734	0.767	0.696	0.722	0.787	0.686	0.723	0.807	**0.746**
SCL	0.807	0.763	0.771	0.782	0.754	0.779	0.716	0.745	0.817	0.713	0.752	0.818	**0.768**
SFA	0.813	0.776	0.785	0.788	0.758	0.786	0.724	0.754	0.825	0.724	0.758	0.825	**0.776**
mSDA	0.819	0.783	0.789	0.783	0.770	0.793	0.738	0.761	0.837	0.730	0.755	0.831	**0.782**
DANN	0.832	0.764	0.790	0.805	0.796	0.814	0.735	0.786	0.841	0.752	0.776	0.843	**0.794**
CNN-a	0.843	0.810	0.813	0.829	0.803	0.819	0.749	0.793	0.843	0.779	0.803	0.855	**0.811**
AMN	0.855	0.824	0.811	0.846	0.812	0.827	0.766	0.827	0.857	0.805	0.812	0.867	**0.825**
HATN	0.858	0.853	0.849	0.858	0.849	0.853	0.808	0.838	0.868	0.824	0.841	0.868	**0.847**
$HATN^h$	0.861	0.857	0.852	0.863	0.856	**0.862**	0.810	0.840	0.879	0.833	**0.845**	0.870	**0.851**
$IATN^n$	0.854	0.849	0.838	0.848	0.855	0.839	0.768	0.825	0.859	0.828	0.835	0.864	**0.837**
IATN	**0.868**	**0.865**	**0.859**	**0.870**	**0.869**	0.858	**0.818**	**0.841**	**0.887**	**0.847**	0.844	**0.876**	**0.859**

- As table shows, IATN model has achieved the best performances on most tasks of the Amazon review dataset.
- From the experimental results, we can also observe that the classification accuracy between similar domains will be **higher than different domain**. For example, "B&D" task is more accurate than "B&K" task because they have more similar aspects.

Attention

Book-pos Example:

This story captivated me right from the outset, as Vivian vague of memory. Her scenes are drawn in sensitively described and insightful detail, and she is a very realistically portrayed.

Book-neg Example:

I am not sure whatever possessed me to buy this book. Honestly, it was a complete waste of free time. To quote a friend, it was not the best use of my entertainment dollar. If you are a fan of pedestrian writing, lack-luster plots and hackneyed character development, this is your book.

Dvd-pos Example:

An amazing film! When seeing this movie's poster, i was not too excited, but when watching it realized how awesome it really is. Not only it's story is well laid out, but the amount of special effects, great scences and good actors.

Dvd-neg Example:

The acting was good. The pace was adequate. However, the plot was predictable. The movie content just reeks of the intelligent thriller syndrome. Clive's character kept calling this the perfect robbery. I'm still don't understand what Jody Foster's character brings to the plot.

- In order to validate that our model is able **to identify the impact of aspect** on sentiment representation, we **visualize** the aspect attention layer.
- We can see that although "**acting**" and "**pace**" both appear with positive emotions in this review, but the more effective aspects "**character**" and "**plot**" have received negative emotions.
- Affected by these more powerful aspects, this review is finally labeled as negative.(**Aspects influence different across domains!**)

Application

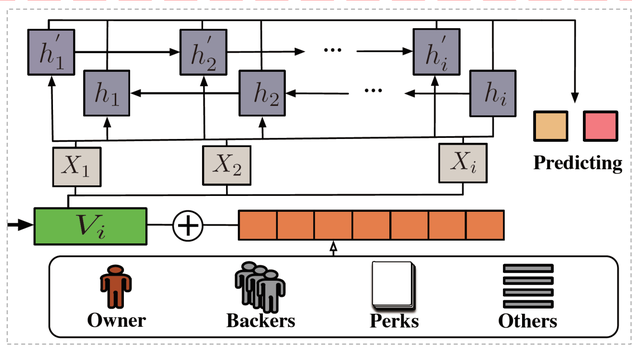

Table 2: Results of crowdfunding project prediction.

Benchmarks	Metrics			
	Accu.	Prec.	Rec.	F1-score.
SVM	0.7671	0.4567	0.6971	0.5536
$LSTM^{one}$	0.7862	0.4813	0.6732	0.5689
$LSTM^{hatn}$	0.7940	0.4843	0.6805	0.5674
$LSTM^{iatn}$	**0.8182**	**0.4977**	**0.6733**	**0.5743**

- The further mission of cross-domain sentiment classification aims to solve the problem of unlabeled domain.
- Thus, to further verify the effectiveness of IATN, we design an application on an completely unlabeled dataset. (**Crowdfunding review dataset!**)
- As table 2 shows, the SVM method without review information performs the worst and the accuracy result is 5.11% lower than $LSTM^{iatn}$.
- $LSTM^{iatn}$ improves the accuracy by 3.20% and 2.42% than $LSTM^{one}$ and $LSTM^{hatn}$ respectively.

Conclusion

- We propose to make cross-domain sentiment classification by integrating the contextual representation and aspect representation of sentences.
- We propose a novel **IATN method** which utilizes the interactive attention mechanism to get important information from both the sentence and aspect.
- We conduct extensive experiments on two real-world datasets. The experimental results validate that our method **outperforms other state-of-the-art** methods.

Future

- Add aspect information to the hierarchical attention network.
- Do some sentiment transfer learning research at the **aspect-level** sentiment classification.